How to Assemble the Cokoino Timer Alarm & Watering device

Table

1. Parts List 2

1.1 Connecting/Fixing Parts 2

1.2 Electronic module 3

1.3 Cable 5

1.4 Tool 6

2. Assemble and Install 7

2.1 Assembly steps 7

3. Make your suggestion and get support 32

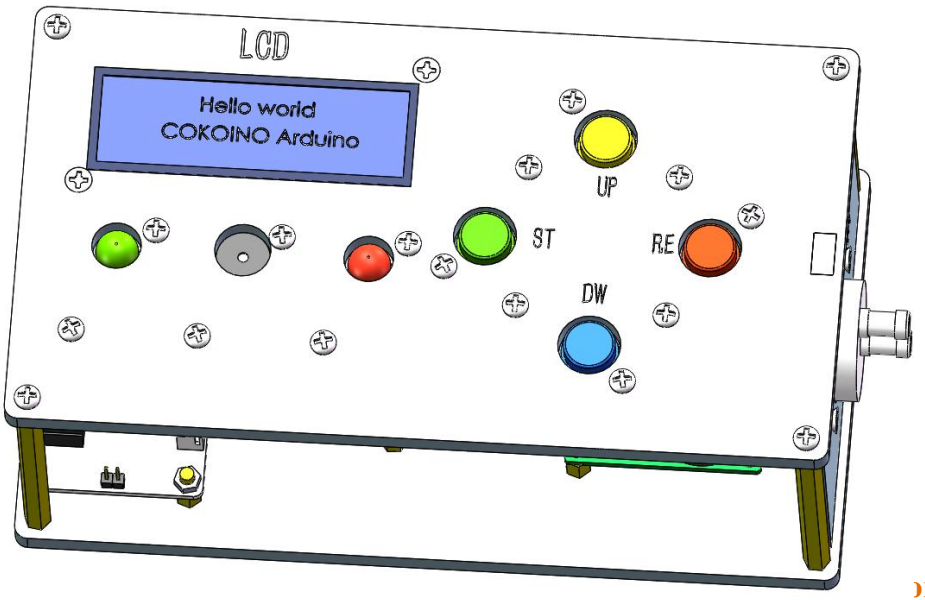

1. Parts List

1.1 Connecting/Fixing Parts

Picture	Name	Description	Qty
	screw	M3*14mm countersunk head screw	6
	screw	M3*8mm round screw	32
	nut	M3 nut	30
	Nylon column	M3 *3mm Nylon column	4
	copper pillar	M3*6mm+6mm copper pillar	25
	copper pillar	M3*60mm double pass copper pillar	4

Support : cokoino@outlook.com

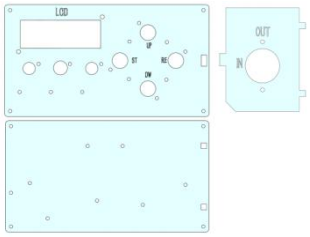	acrylic structural parts	Acrylic structural parts for timing alarm clock & watering system (thickness 5mm, black, 1 set)	1

1.2 Electronic module

Picture	Name	Description	Qty
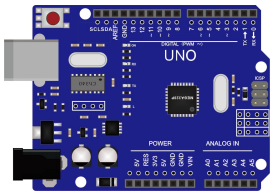	Control board	Arduino UNO with CH340 version	1
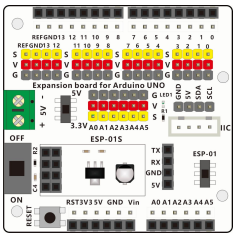	expansion board	UNO expansion board	1
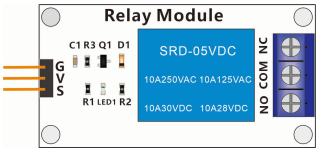	module	5V relay module	1
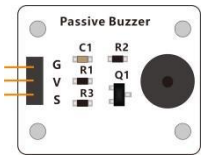	module	Passive buzzer module	1

Support : cokoino@outlook.com

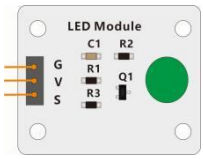	module	10mm LED module green	1
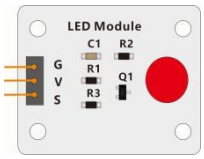	module	10mm LED module red	1
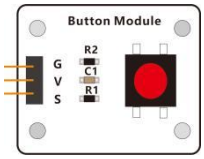	module	Button module red hat	1
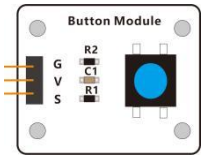	module	Button module blue hat	1
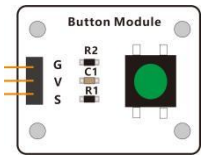	module	Button module green hat	1
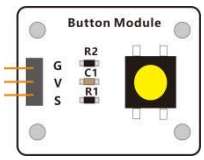	module	Button module yellow hat	1
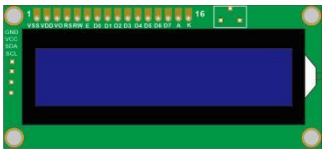	LCD module	1602 I2C LCD module	1
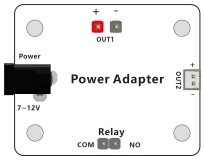	module	Power interface adapter board	1
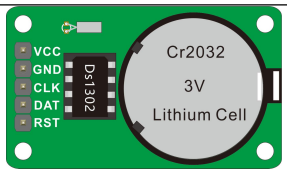	module	DS1302 clock module	1

Support : cokoino@outlook.com

	water pump	370 water pump （DC6~12V）	1
	Power adapter	AC to DC 9V/1A Power Supply (US Standard)	1

1.3 Cable

Picture	Name	Description	Qty
	USB cable	USB2.0 AM/BM blue 50CM	1
	Connecting wire	Female-to-Female 3-pin Dupont Wire (Integrated) 150mm Black, Red, Yellow	8
	Connecting wire	Female-to-Female 2-Pin Dupont Wire (Integrated) 150mm Black & Red	1
	Connecting wire	Female-to-Female 2-Pin Dupont Wire (Integrated) 150mm Black & Red	1
	Connecting wire	Male-to-female 2-pin Dupont wire (single) 150mm yellow-green	1

Support : cokoino@outlook.com

	Connecting wire	Female-to-Female 5-pin Dupont Wire (One Side Integrated + One Side Separate) 150mm Red, Black, Yellow, Green, Blue	1
	Connecting wire	1602LCD Connecting wire XH2.54 170mm	1

1.4 Tool

Picture	Name	Description	Qty
	screwdriver	M3 Phillips screwdriver	1
	Phillips screwdriver socket	M2/M2.5/M3/M4Phillips screwdriver socket	1

Support : cokoino@outlook.com

2. Assemble and Install

2.1 Assembly steps

Note: 1. Before assembly, we need to use a screwdriver to peel off the protective paper of the acrylic structure;

Step	1	Install M3*6mm+6mm copper pillars on the base		Tool	M3 Phillips screwdriver
List	Part Name	Quantity	Unit	Picture	
	Base	1	PCS	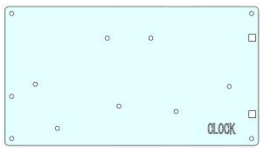	
	M3*6mm +6mmcopper pillar	8	PCS		
	M3*8mm round head screw	8	PCS		
	Description			Demo	
A					

Support : cokoino@outlook.com

	1.Secure 8 pieces of M3*6mm+6mm single-pass copper pillars to the base using 8 pieces of M3*8mm round head screws; (The side of the base marked with **CLOCK** should face upward) Note: Installation direction of the copper pillar;	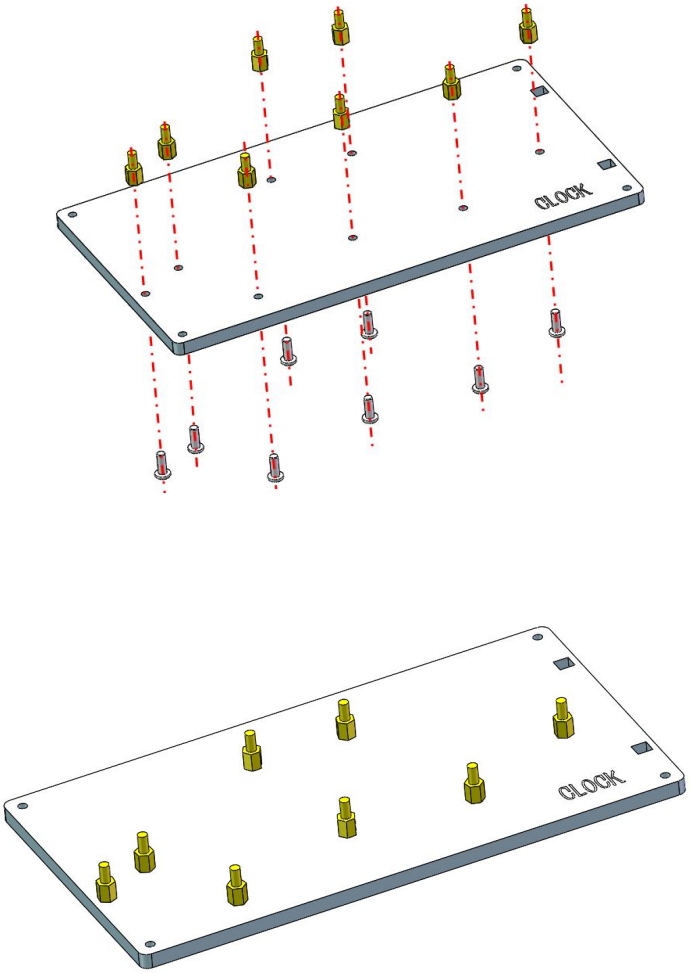

Step	2	Install the electronic module onto the base	Tool	Cross socket

List	Part Name	Quantity	Unit	Picture
	Step 1 part	1	PCS	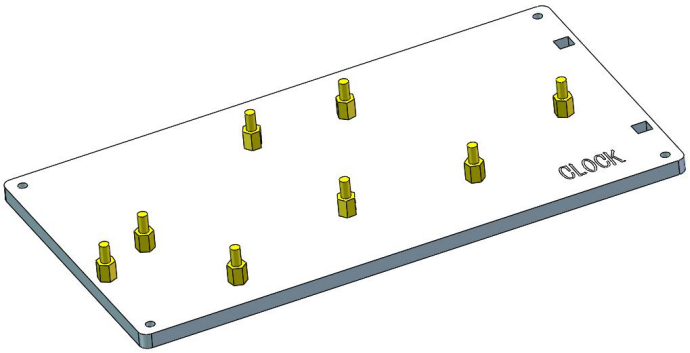

Support : cokoino@outlook.com

	UNO	1	PCS	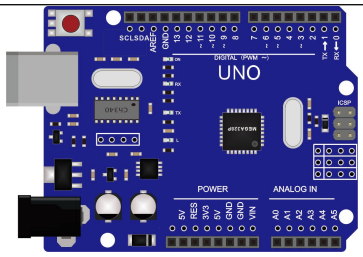
	DCPower interface adapter board	1	PCS	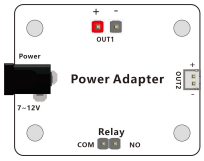
	relay	1	PCS	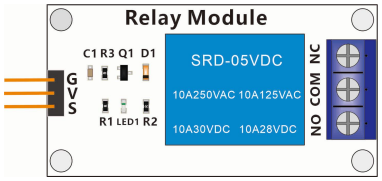
	clock module	1	PCS	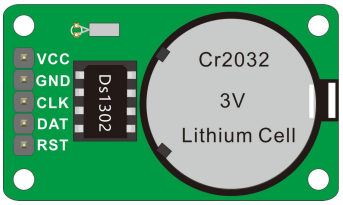
	UNOexpansion board	1	PCS	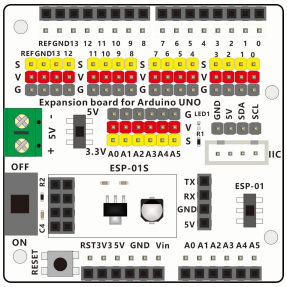
	M3 nut	7	PCS	
	Description			Demo

Support : cokoino@outlook.com

A	1. Install the Arduino UNO, DC Power interface adapter board, relay module, and clock module onto the M3*6mm+6mm single-pass copper pillars in sequence; (pay attention to the installation orientation of the modules) 2. Tighten the M3 nut, then secure it with a Phillips socket.	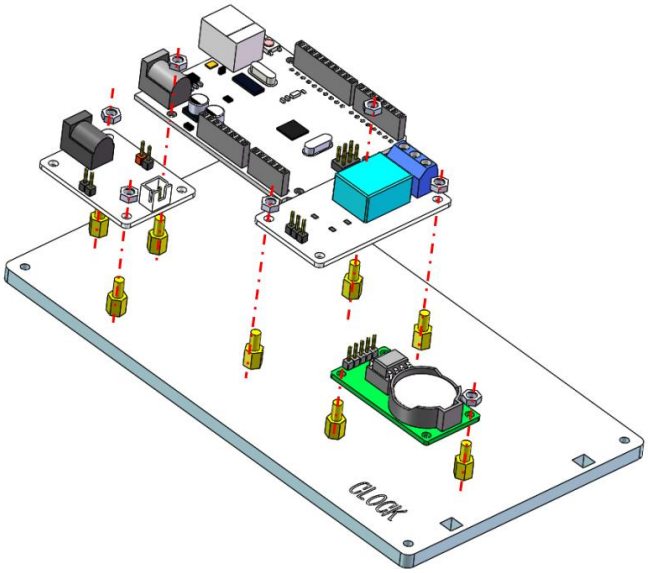 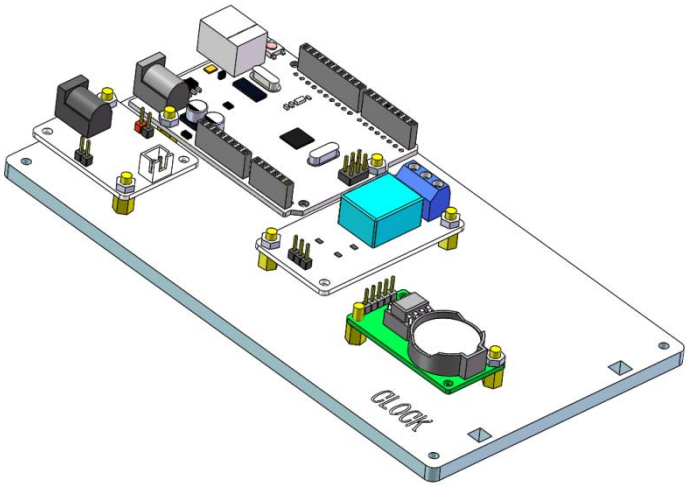

Support : cokoino@outlook.com

	3. Insert the UNO R3 expansion board into the UNO; (note the corresponding positions of the pin headers on the expansion board and the pin sockets on the UNO board)	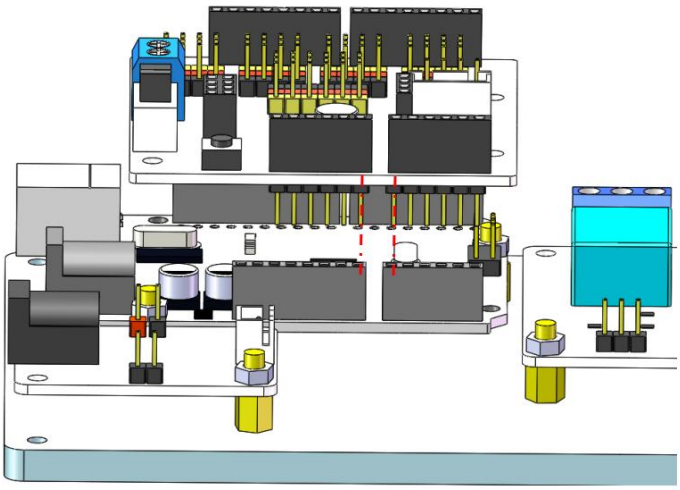 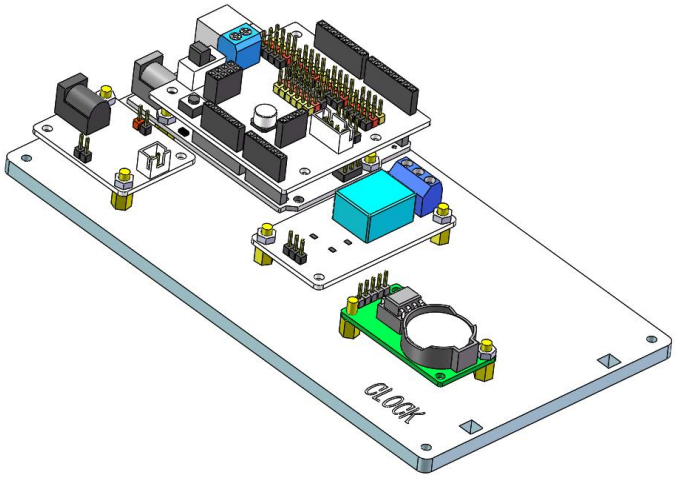

Step	3		Install M3*60mm copper pillars on the base	**Tool**	M3 Phillips screwdriver
List	Part Name	Quantity	Unit	Picture	

Support : cokoino@outlook.com

	Step 2 part	1	PCS	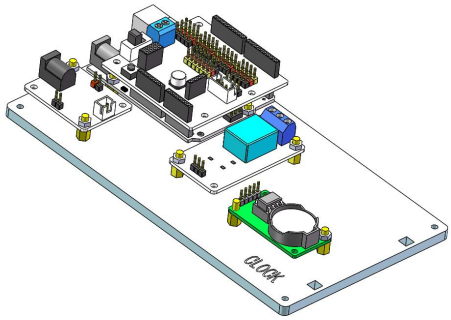
	M3*60mm double passed copper pillar	4	PCS	
	M3*8mm round head screw	4	PCS	
	Description			Demo
A	1.Use 4 pcs M3*8mm round head screws to secure 4 pcs M3*60mm dual-pass copper pillars to the base; (note the installation direction of the copper pillars)			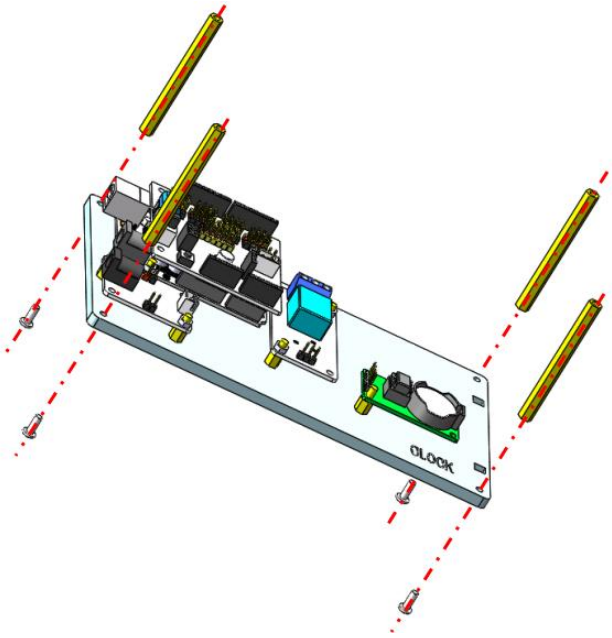

Support : cokoino@outlook.com

		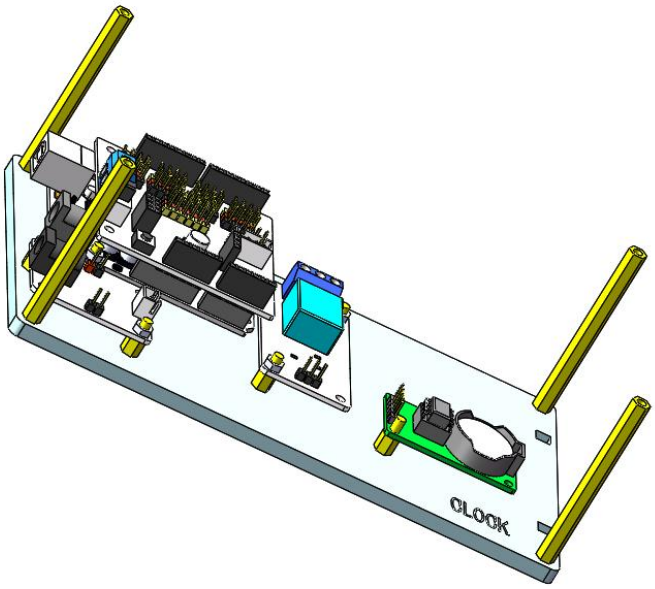
	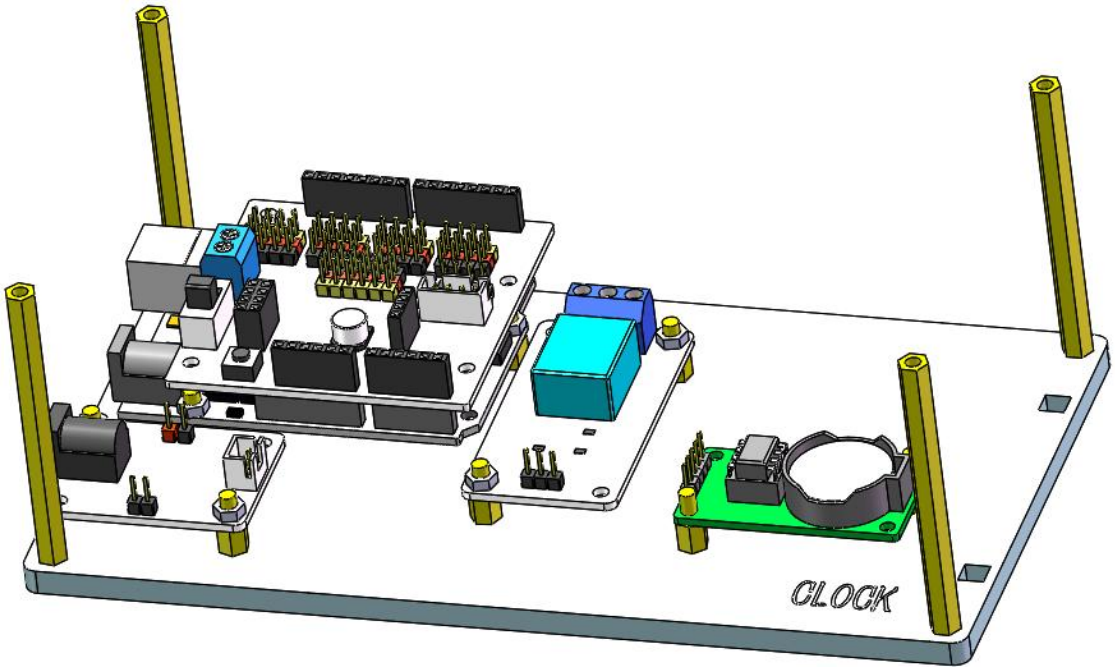	

Support : cokoino@outlook.com

Step	4	Assemble 370 water pump		**Tool**	M3 Phillips screwdriver
List	Part Name	Quantity	Unit	Picture	
	water pump bracket	1	PCS	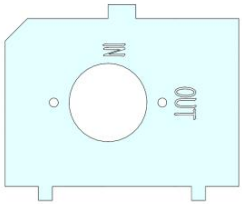	
	370water pump	1	PCS	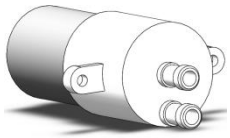	
	M3*14mm countersunk head screw	2	PCS		
	M3 nut	2	PCS		
	Description			Demo	
A					

	1. Secure the 370 water pump to the water pump bracket using M3*14mm countersunk head screws and M3 nuts; (note that during installation, the water inlet and outlet ports of the water pump should correspond to the marks on the bracket, with the water inlet aligned to the IN position and the water outlet aligned to the OUT position)	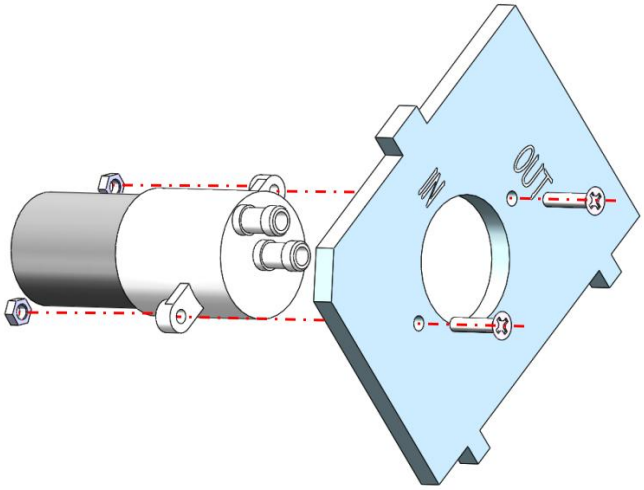 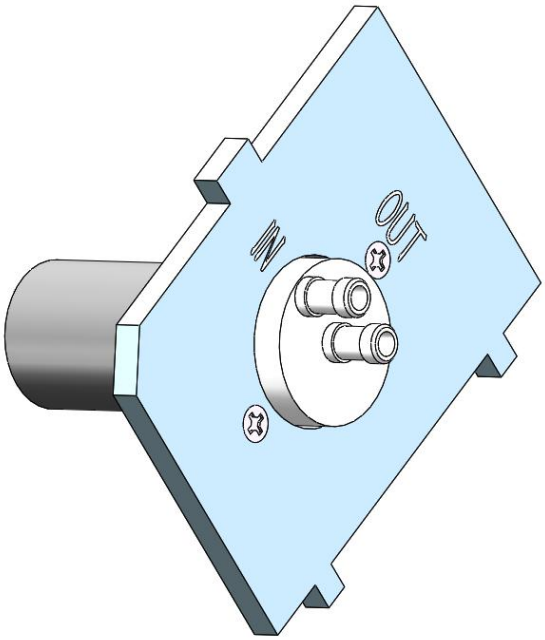

Step	5	Install the 1602 LCD module	**Tool**	M3 Phillips screwdriver/Phillips screwdriver socket
List	Part Name	Quantity	Unit	Picture

	upper cover	1	PCS	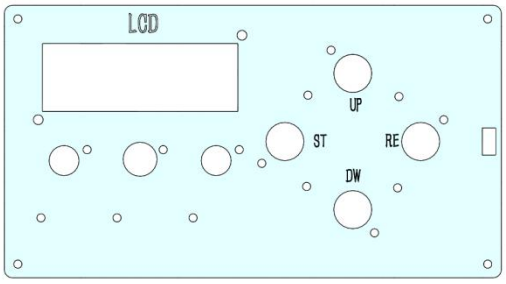
	LCD module	1	PCS	
	M3 Nylon column	2	PCS	
	M3*14 mm counters unk head screw	2	PCS	
	M3 nut	2	PCS	
	Description			Demo
A				

	1.Use 2 pcs M3*14mm countersunk head screws and 2 pcs M3 nuts to secure the 1602LCD module and M3 nylon pillars to the upper cover in sequence; (Pay attention to the installation orientation of the 1602LCD module. The 4PIN connector on the 1602LCD module is close to the left side of the upper cover.）	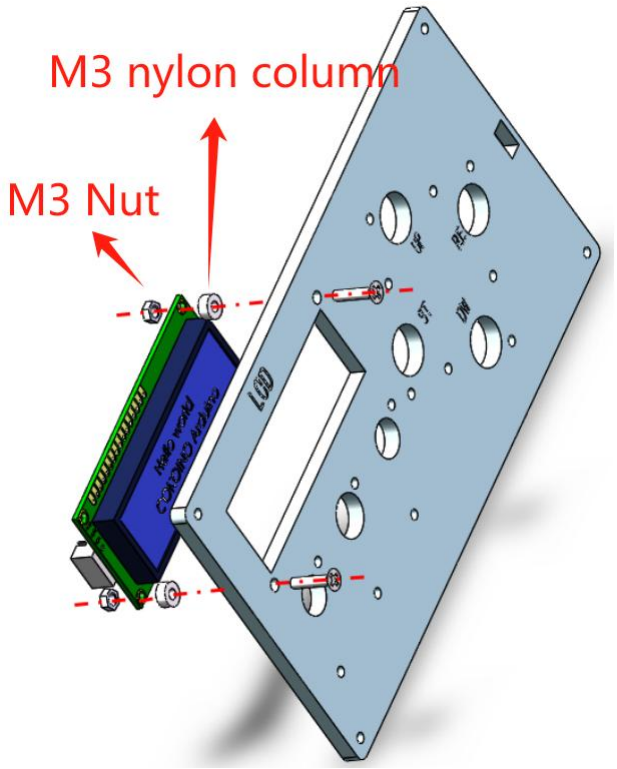

<table>
<tr><td></td><td colspan="3"></td><td colspan="2"> 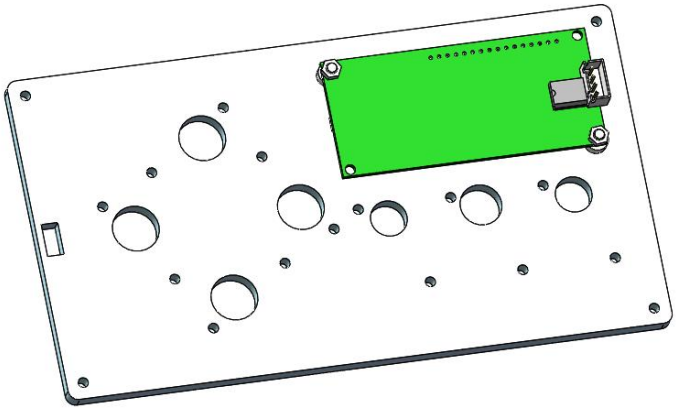 </td></tr>
<tr><td>Step</td><td>6</td><td colspan="2">Install M3*6mm + 6mm copper pillars on the upper cover.</td><td>Tool</td><td>M3 Phillips screwdriver
 </td></tr>
<tr><td rowspan="4">List</td><td>Part Name</td><td>Quantity</td><td>Unit</td><td colspan="2">Picture</td></tr>
<tr><td>Step 5 part</td><td>1</td><td>PCS</td><td colspan="2"> 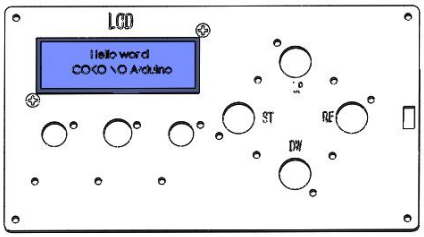
</td></tr>
<tr><td>M3*6mm +6mm copper pillar</td><td>14</td><td>PCS</td><td colspan="2"> </td></tr>
<tr><td>M3*8mm round head screw</td><td>14</td><td>PCS</td><td colspan="2"> </td></tr>
<tr><td></td><td colspan="3">Description</td><td colspan="2">Demo</td></tr>
</table>

A	1.Use 14 pieces of M3*8mm round head screws to secure 14 pieces of M3*6mm+6mm copper pillars to the upper cover; (note the installation direction of the copper pillars)	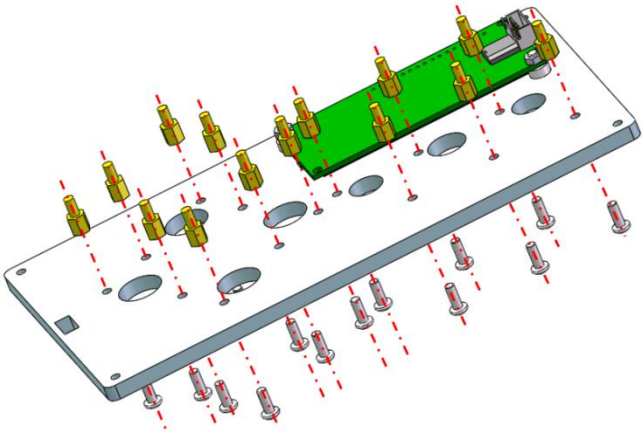 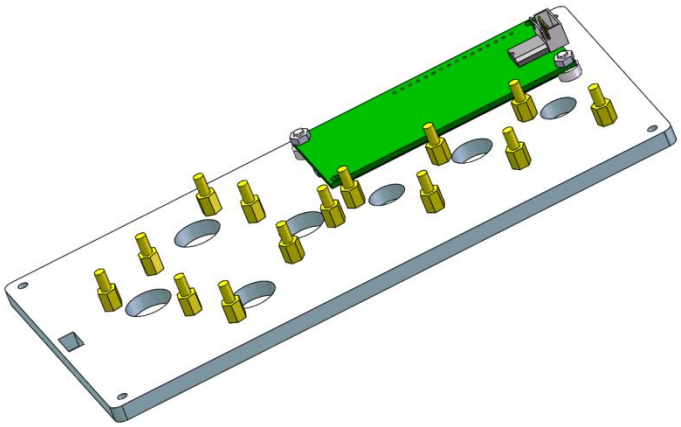 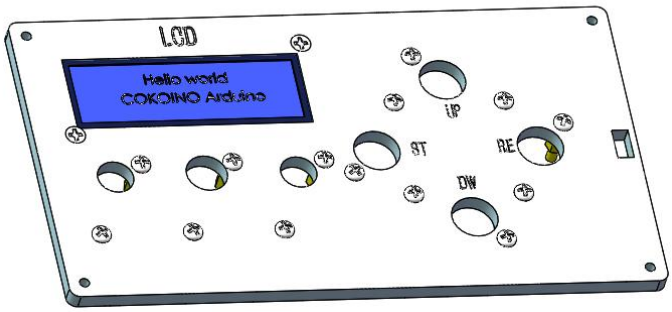

Step	7	Install the LED module and buzzer module on the top cover		**Tool**	Cross socket
List	Part	Quantity	Unit	Picture	

	Name			
	Step 6 part	1	PCS	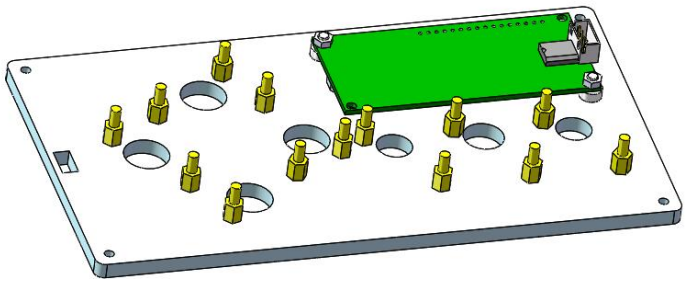
	green led module	1	PCS	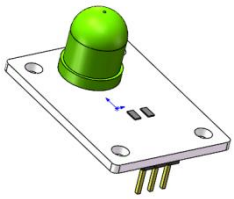
	Red led module	1	PCS	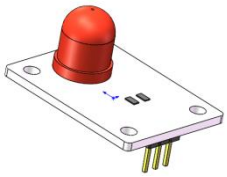
	Passive buzzer	1	PCS	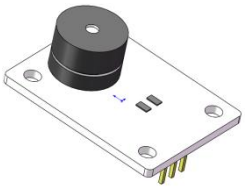
	M3 nut	6	PCS	
	Description			Demo
A				

	1. Secure the green led module, passive buzzer, and red led module to the copper pillar using 6 pcs M3 nuts; (note the installation orientation of the modules)	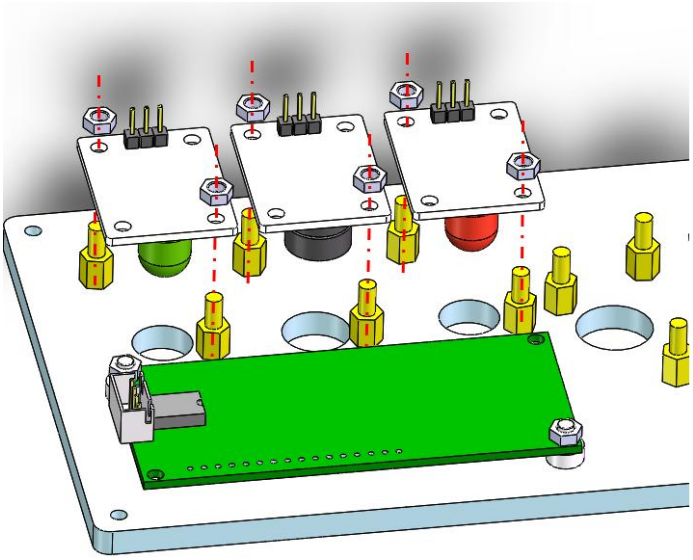 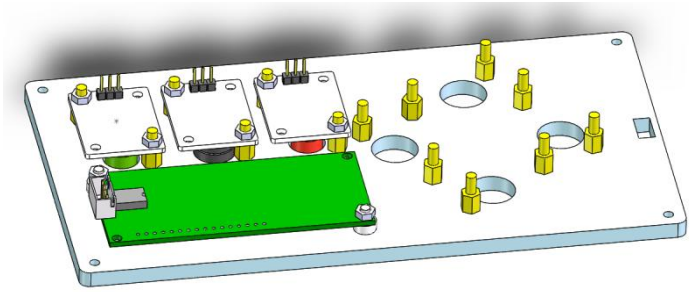

Step	8	Install the Button module on the upper cover.	**Tool**	Cross socket

List	Part Name	Quantity	Unit	Picture
	Step 7 part	1	PCS	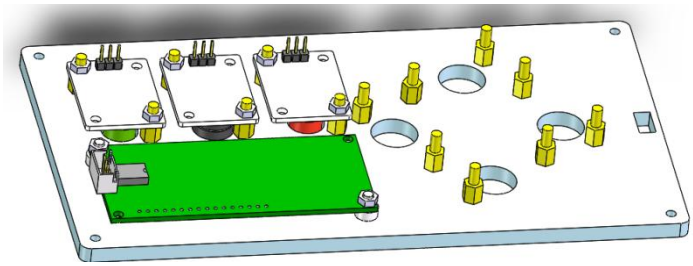

	green Button	1	PCS	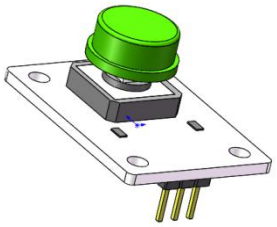
	yellow Button	1	PCS	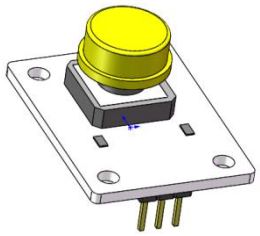
	red Button	1	PCS	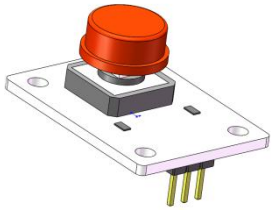
	blue Button	1	PCS	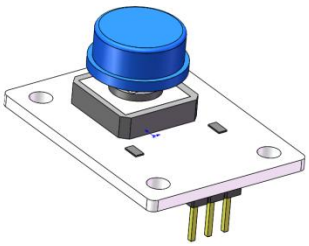
	M3 nut	8	PCS	
	Description			Demo

A	1. Install the green, yellow, red, and blue buttons onto the M3*6mm+6mm copper pillars in sequence (note the button installation positions: green button corresponds to ST; yellow button corresponds to UP; red button corresponds to RE; blue button corresponds to DW), then fasten the M3 nuts and tighten them using a cross socket wrench.	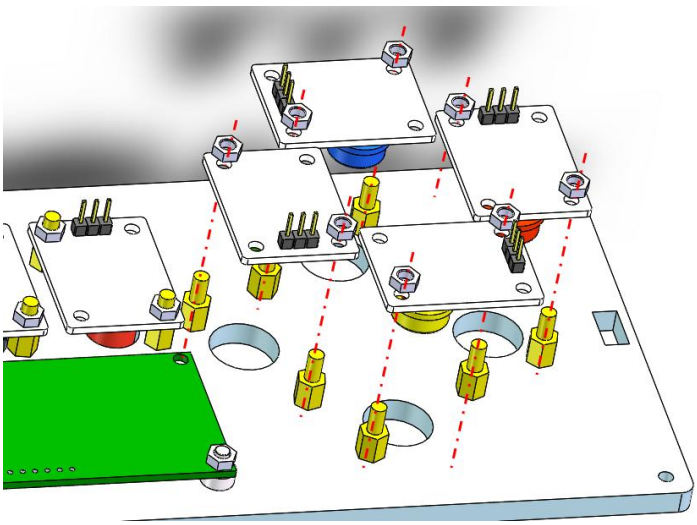 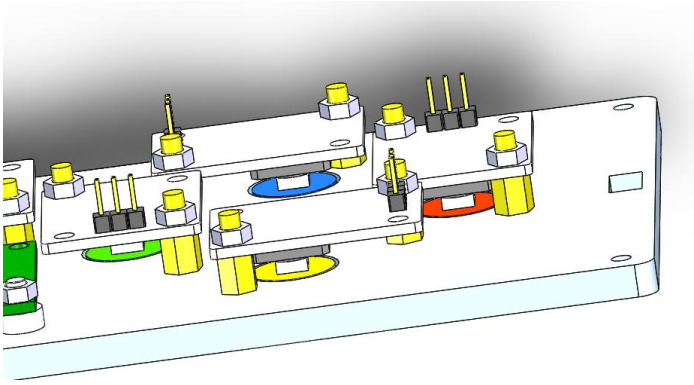 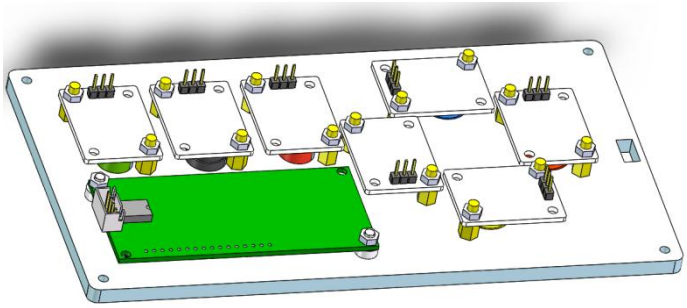 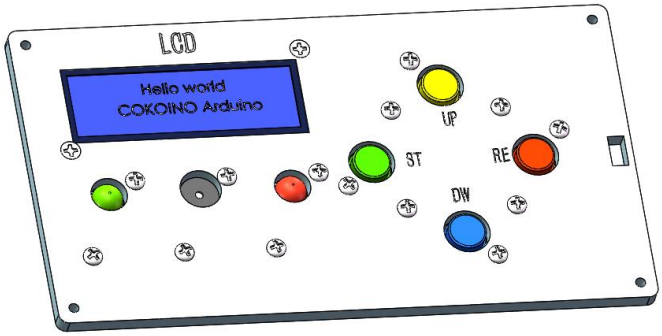

Step	9	Wiring connections between the water pump, modules and expansion board		**Tool**	M3 Phillips screwdriver
List	Part Name	Quantity	Unit	Picture	
	Step 3 part	1	PCS	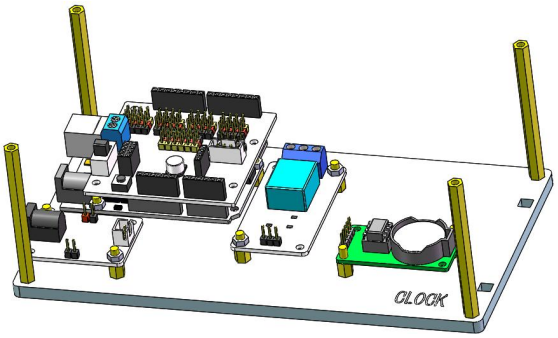	
	Step 4 part	1	PCS	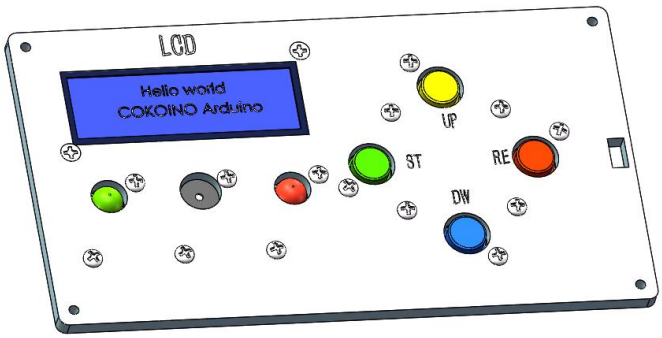	
	Step 8 part	1	PCS	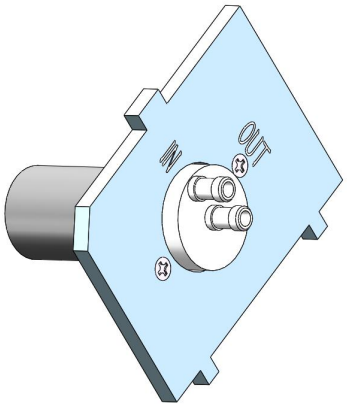	

	Female-to-Female 3-Pin Dupont Wire (Integrated) 150mm Black-Red-Yellow	8	PCS	
	Female-to-Female 2-Pin Dupont Wire (Integrated) 150mm Black & Red	1	PCS	
	2-pin Dupont wire, male to female (single), 100mm, black and red	1	PCS	
	2-pin Dupont wire male to female (single) 150mm yellow-green	1	PCS	

	5-pin Dupont wire male to female (single) 150mm yellow-green	1	PCS	
	1602LCD Connecting wire XH2.54 170mm	1	PCS	
	Description			Demo
A	1. Install the water pump bracket equipped with the 370 water pump into the corresponding slot on the base;			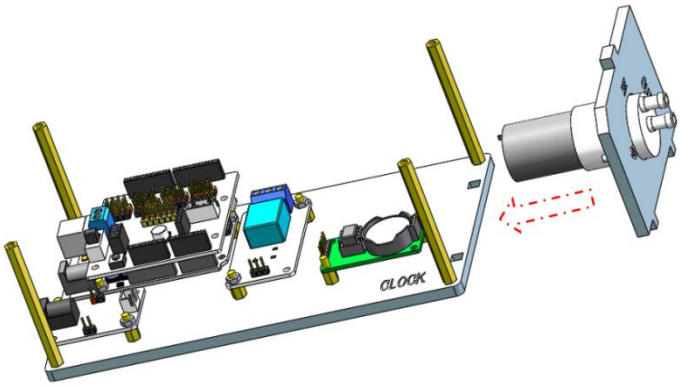 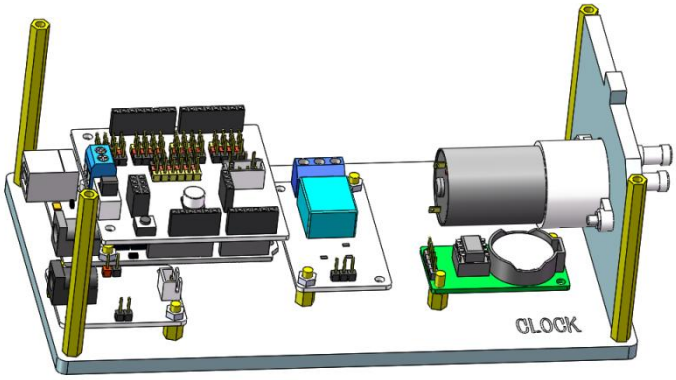

Wiring connections between the water pump, DC power adapter module, relay module and UNO expansion board: As shown in the right figure, insert the 2-pin connector that comes with the water pump into the OUT2 port on the DC power adapter module. Use a female-to-female 3-pin (integrated, 150mm, black-red-yellow) Dupont wire to connect the relay module and the UNO expansion board.

Wiring between the relay module and the Arduino UNO expansion board

pins of relay module	pins of the expansion board	Connection wire
G	G	3Pin Female to female dupont wire(Black, red, yellow),Length 150mm
V	V	
S	9	

Use a male-to-female 2-pin Dupont wire (single 150mm, yellow-green) to connect the relay module and the DC power adapter board.

Wiring between the relay module and Power Adapter board

pins of relay module	pins of Power Adapter board	Connection wire
COM	COM	1Pin Female to male dupont wire(green),Length 150mm
NO	NO	1Pin Female to male dupont wire(yellow),Length 150mm

Use a male-to-female 2-pin Dupont wire (150mm individually, black and red) to connect the UNO expansion board and the DC power adapter board.

Wiring between the Power Adapter board and the Arduino UNO expansion board

pins of Power Adapter	pins of the expansion board	Connection wire
OUT1+	Vin	1Pin Female to male dupont wire(red),Length 100mm
OUT1-	GND	1Pin Female to male dupont wire(black),Length 100mm

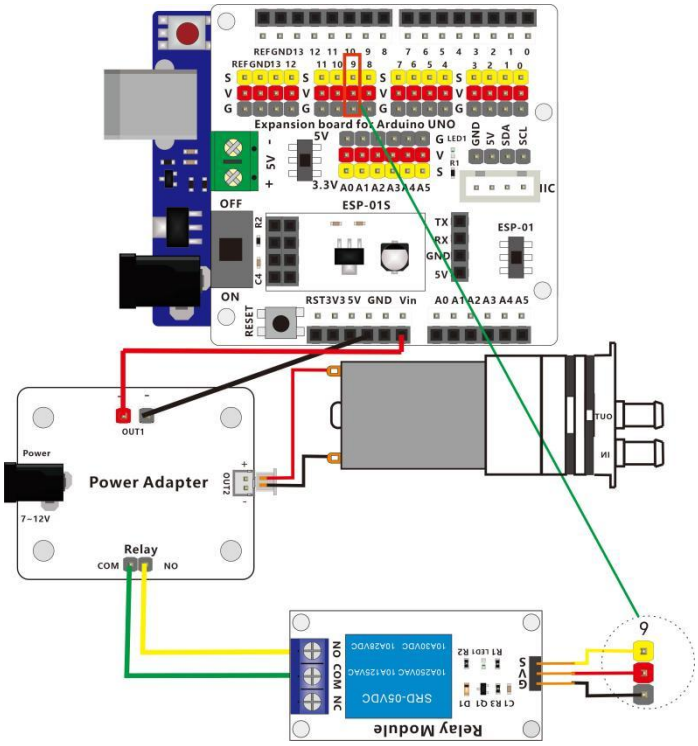

Wiring connections between the DS1302 module, 1602LCD module and UNO expansion board:

As shown in the right figure, connect the expansion board and the DS1302 module using a 5-pin Dupont wire. Note that the connected end should be inserted into the pin headers of the DS1302, and the red Dupont wire corresponds to the VCC pin of the DS1302.

Wiring between the DS1302 and the Arduino UNO expansion board		
pins of DS1302 RTC module	pins of the expansion board	Connection wire
VCC	V	Mother-to-mother 5-pin Dupont wire (one side integrated + one side separate) 150mm red, black, yellow, green, blue
GND	G	
CLK	7	
DAT	6	
RST	8	

Use a 1602LCD connecting wire (XH2.54). Insert one end into the 4-pin interface of the 1602LCD, and the other end into the IIC interface on the expansion board.

Wiring between the 1602LCD module and the Arduino UNO expansion board		
pins of 1602LCD module	IIC port of Arduino UNO expansion board	Connection wire
GND	GND	1602 LCD connecting wire XH2.54 (reverse terminal) 170mm
VDD	5V	
SDA	SDA	
SCL	SCL	

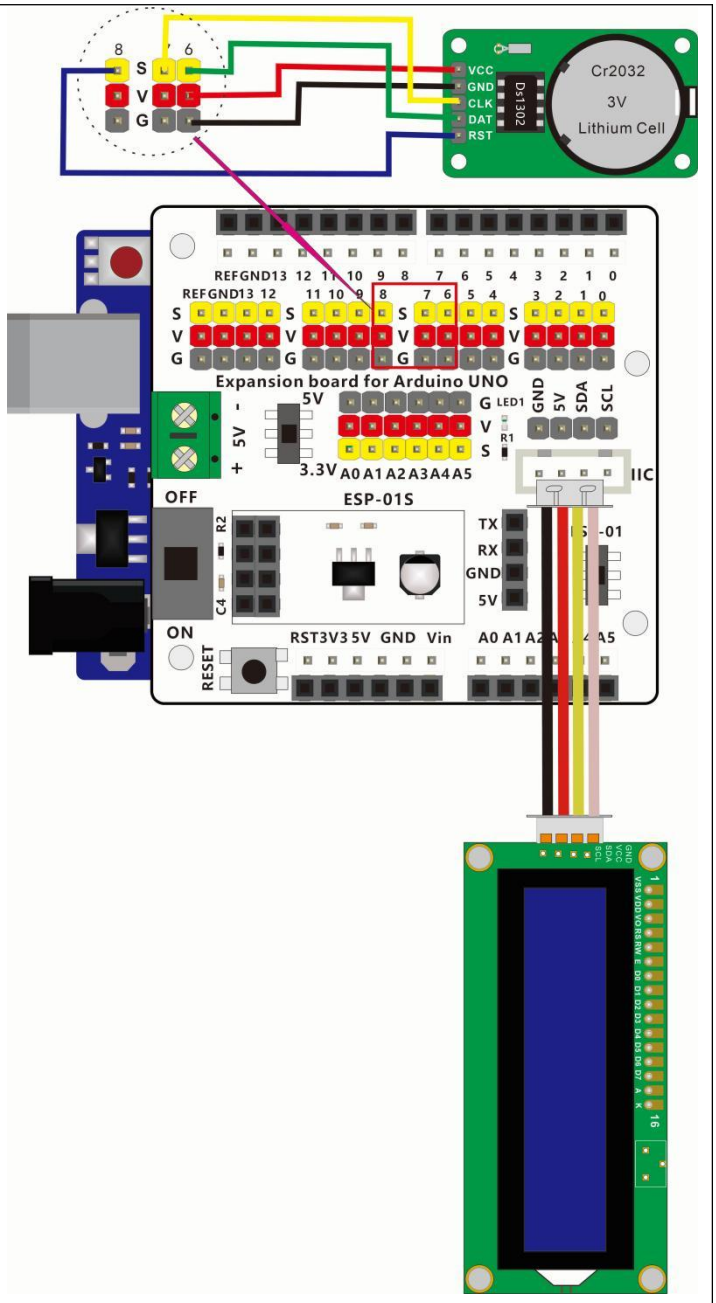

Wiring connection between the Button module and the UNO expansion board:

As shown in the right figure, use female-to-female 3-pin (integrated, 150mm, black-red-yellow) Dupont wires to connect the pin headers of the Button module and the UNO expansion board (note the color correspondence: black for G, red for V, yellow for S).

Connect the Button modules to the Expansion board for Arduino UNO		
Red Button module	Expansion board for Arduino UNO	Connection wire
S	D2	Mother-to-mother 3-pin Dupont wire (integrated) 150mm, black-red-yellow
V	V	
G	G	
Green Button module	Expansion board for Arduino UNO	Connection wire
S	D3	Mother-to-mother 3-pin Dupont wire (integrated) 150mm, black-red-yellow
V	V	
G	G	
Blue Button module	Expansion board for Arduino UNO	Connection wire
S	D4	Mother-to-mother 3-pin Dupont wire (integrated) 150mm, black-red-yellow
V	V	
G	G	
Yellow Button module	Expansion board for Arduino UNO	Connection wire
S	D5	Mother-to-mother 3-pin Dupont wire (integrated) 150mm, black-red-yellow
V	V	
G	G	

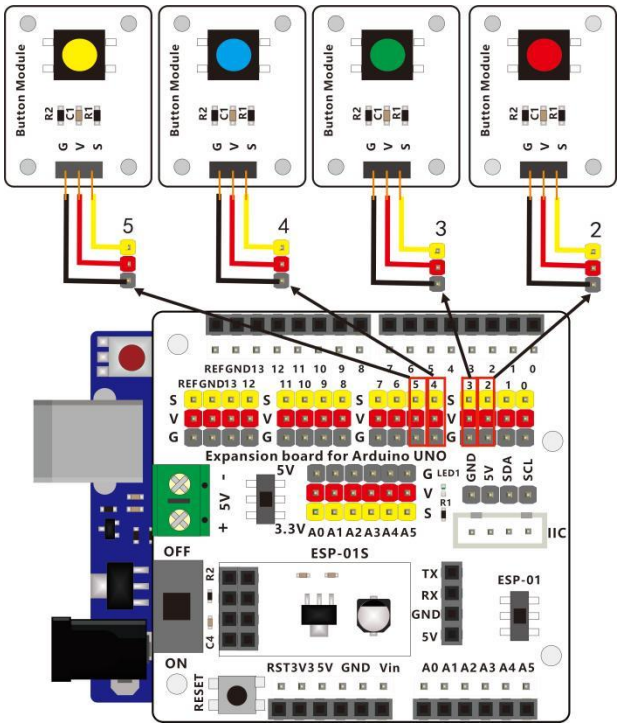

Wiring connections between the LED module, Passive buzzer module and UNO expansion board:

As shown in the right figure, use female-to-female 3-pin (integrated, 150mm, black-red-yellow) Dupont wires to connect the pin headers of the LED module, buzzer module and UNO expansion board.(note the color correspondence: black for G, red for V, yellow for S).

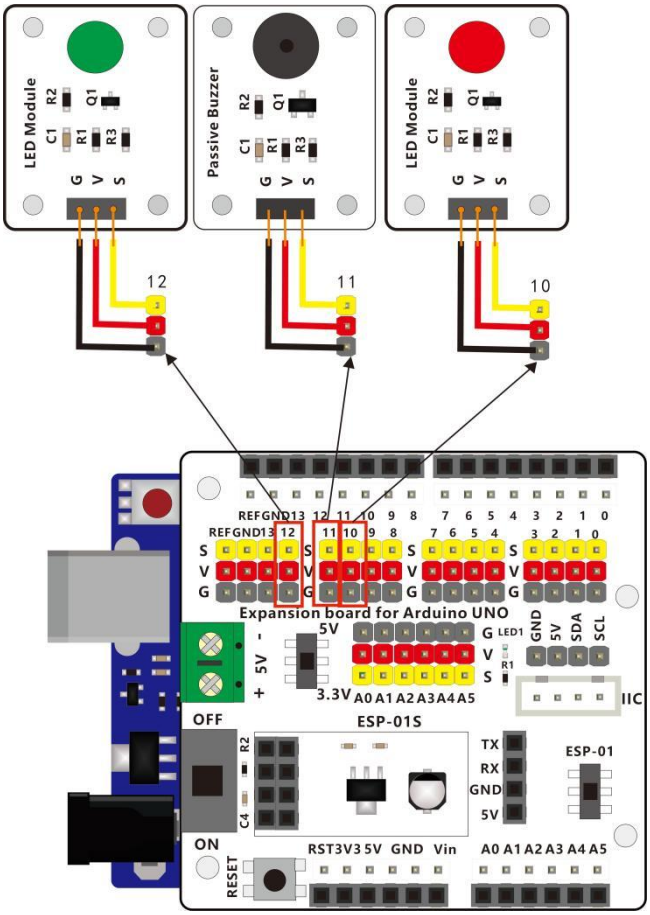

Connect the LED modules and Buzzer module to the Expansion board for Arduino UNO

Red LED module	Expansion board for Arduino UNO	Connection wire
S	D10	Mother-to-mother 3-pin Dupont wire (integrated) 150mm, black-red-yellow
V	V	
G	G	
Green LED module	**Expansion board for Arduino UNO**	**Connection wire**
S	D12	Mother-to-mother 3-pin Dupont wire (integrated) 150mm, black-red-yellow
V	V	
G	G	
Buzzer module	**Expansion board for Arduino UNO**	**Connection wire**
S	D11	Mother-to-mother 3-pin Dupont wire (integrated) 150mm, black-red-yellow
V	V	
G	G	

Step	10	Assembly of the base and the upper cover	Tool	M3 Phillips screwdriver

List	Part Name	Quantity	Unit	Picture
	Step 9 part	1	PCS	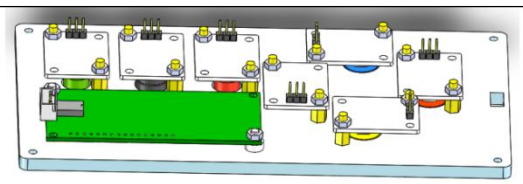 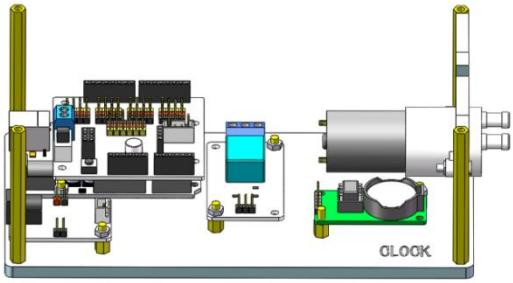
	M3*8mm round head screw	4	PCS	
	Description			Demo

A	1.Secure the base and the upper cover with 4 pcs M3*8mm round head screws; (Note the installation direction of the upper cover)	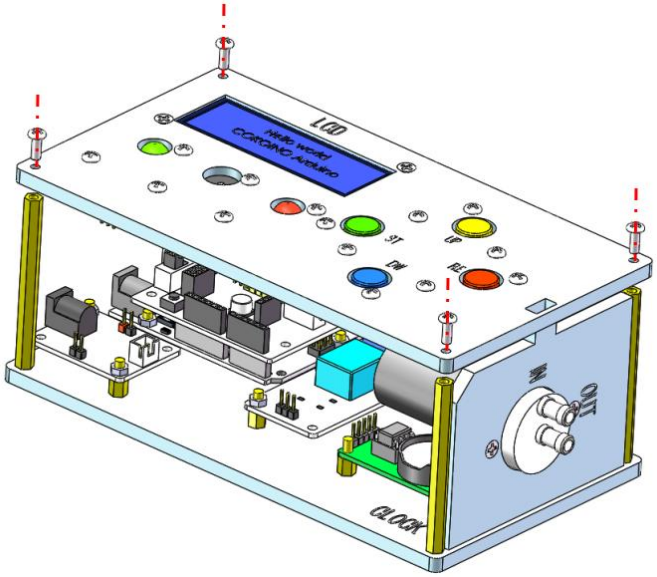 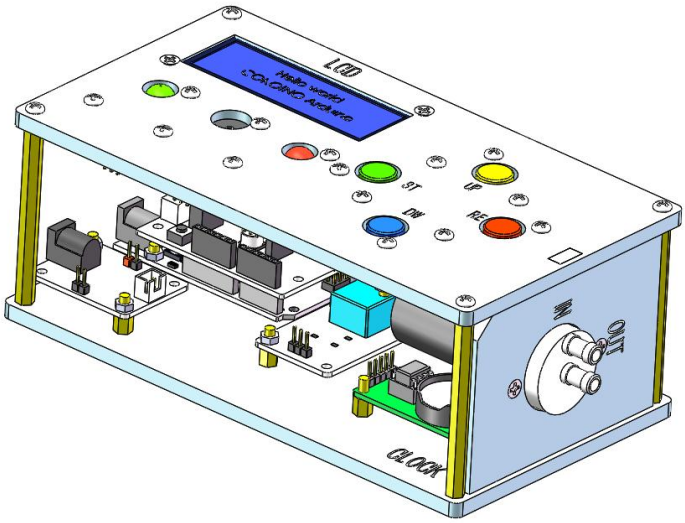

Congratulations, you have completed an interesting timed alarm & watering device!

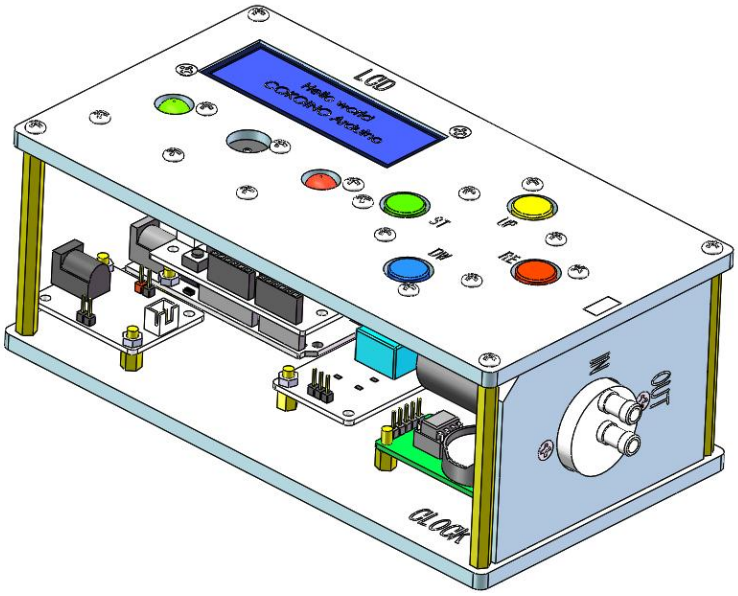

3. Make your suggestion and get support

THANK YOU for participating in this assemble document!

If you find errors, omissions or you have suggestions and/or questions about this document, please feel free to contact us: **cokoino@outlook.com**

We will make every effort to make changes and correct errors as soon as feasibly possible and publish a revised version.

If you want to learn more about Arduino, Raspberry Pi, Smart Cars, Robotics and other interesting products in science and technology, please continue to visit our Amazon Store by search for "LK COKOINO" on Amazon. Or visit our official website: **www.cokoino.com**

We will continue to launch fun, cost-effective, innovative and exciting products.

Thank you again for choosing Cokoino products.
LK COKOINO